METER

C

Job Specification Sheet 3
General Residential Installation Check List 4
Valve Installation and Start-up Procedures. 5
*Model **5600** Installation and Start-up Procedures* 6
*Model **5600** Backwash Filter Installation and Start-up Procedures* 7
*Model **5600** Econominder Installation and Start-up Procedures* 9
Water Conditioner Flow Diagrams 10
Service Position 10
Preliminary Rinse Position 10
Backwash Position 11
Brine Position 11
Slow Rinse Position 12
Rapid Rinse Position 12
Settling Rinse Position 13
Brine Tank Fill Position 13
*Model **5600** Control Valve Drive Assembly* 14
*Model **5600** and **5600** Econominder Control Valve Drive Assembly* 16
*Model **5600** Econominder Control Valve Drive Assembly* 18
Bypass Valve Assembly, Plastic 20
Bypass Valve Assembly, Brass 21
*Model **5600** Econominder Meter Assembly* 22
Service Instructions 23
Replace Time Brine Valve, Injectors and Screen 23
Replace Timer 24
Replace Piston Assembly 25
Replace Seals and Spacers 26
Replace Meter 27
Replace Meter Cover and/or Impeller 28
*Model **5600** and **5600** Econominder Troubleshooting* 29
General Service Hints for Meter Control 30
*Model **5600** **F** Troubleshooting* 31
Service Assemblies 32

J

Job Number _____

Model Number _____

Water Test _____

Capacity of Unit _____ Max. _____ Per Regeneration

Mineral Tank Size: Diameter _____ Height _____

Brine Tank Size and Salt Setting Per Regeneration: _____

C

Type of Timer: ___ Std. ___ "L" ___ 7-day ___ 12-day ___ Meter, Std. ___ Meter, Ext.

Day/Time of Regeneration _____

Drain Line Flow Control _____ gpm

Brine Refill Rate _____ gpm

Injector Size _____

Meter Gallon Setting _____ gal

( )	I	( ) @ 40	B D ( ) @ 40	BLFC[1]	BLFC[2]
6" 7"	#0 red #0 red	.31 gpm .31 gpm	.28 gpm .28 gpm	.5 gpm .5 gpm	1.2 gpm 1.2 gpm
8" 9" 10"	#1 white #1 white #1 white	.45 gpm .45 gpm .45 gpm	.38 gpm .38 gpm .38 gpm	.5 gpm .5 gpm .5 gpm	1.5 gpm 2.0 gpm 2.4 gpm
12" 13"	#2 blue #2 blue	.84 gpm .84 gpm	.56 gpm .56 gpm	1.0 gpm 1.0 gpm	3.5 gpm 4.0 gpm
14" 16"	#3 yellow #3 yellow	1.0 gpm 1.0 gpm	.63 gpm .63 gpm	1.0 gpm 1.0 gpm	5.0 gpm 7.0 gpm

E: Due to varying water conditions, tank sizes and water pressures, use the above settings as guidelines only.

[1]**BLFC** (Brine Line Flow Control), refill rate for filling brine tank.

[2]**DLFC** (Drain Line Flow Control), backwash and rapid rinse flow rates.

W

A minimum of 25 psi (1.7 bar) of water pressure is required for regeneration valve to operate effectively.

E F

An uninterrupted alternating current (A/C) supply is required. Please make sure voltage supply is compatible with unit before installation.

E W

Condition of existing plumbing should be free from lime and iron buildup. Replace piping that has heavy lime and/or iron build-up. If piping is clogged with iron, install a separate iron filter unit ahead of the water softener.

L D

Locate the softener close to a clean working drain and connect according to local plumbing codes.

B

Always provide for the installation of a bypass valve if unit is not equipped with one.

CA I

D 120 (8.2) W .
D 110 F (43 C) W .
D W W .

I 9 9

1. Place the softener tank where you want to install the unit.

   E: Be sure the tank is level and on a firm base.

2. During cold weather it is recommended that the installer warm the valve to room temperature before operating.
3. Perform all plumbing according to local plumbing codes.
   - Use a 1/2" (13 mm) minimum pipe size for the drain.
   - Use a 3/4" (19 mm) drain line for backwash flow rates that exceed 7 gpm (25.6 Lpm) or length that exceeds 20′ (6 m).
4. Cut the 1" (25 mm) distributor tube (1.050 O.D.) flush with top of each tank.

   E: Only use silicone lubricant.

5. Lubricate the distributor O-ring seal and tank O-ring seal. Place the main control valve on tank.
6. Solder joints near the drain must be done before connecting the Drain Line Flow Control fitting (DLFC). Leave at least 6" (152 mm) between the DLFC and solder joints when soldering pipes that are connected on the DLFC. Failure to do this could cause interior damage to DLFC.
7. Use only tape on the drain fitting.
8. Be sure the floor under the salt storage tank is clean and level.
9. Place approximately 1" (25 mm) of water above the grid plate. If a grid is not utilized, fill to the top of the air check in the salt tank. Do not add salt to the brine tank at this time.
10. On units with a bypass, place in **B**. position.
    - Turn on the main water supply.
    - Open a cold soft water tap nearby and let water run a few minutes or until the system is free of foreign material (usually solder) resulting from the installation. Close the water tap when water runs clean.
11. Place the bypass in the **I** position and let water flow into the mineral tank. When water flow stops, slowly open a cold water tap nearby and let water run until air is purged from the unit. Then close tap.
12. Plug the valve into an approved power source. When the valve has power it drives to the **I** position.

E: Install the water softener with the inlet, outlet and drain connections made according to manufacturer's recommendations and to meet applicable plumbing codes.

1. Manually index the softener control into the **I** position and let water flow into the resin tank. When the water flow stops, open a softened water tap until all air is released from the lines. Then close tap.

   E: Manually dial the various regeneration positions by turning the knob on the front of the control until the indicator shows that the softener is in the desired position.

2. Manually index the control to the **B** position and allow water to flow at the drain for 3 or 4 minutes.

E: Install the water softener with the inlet, outlet and drain connections made according to manufacturer's recommendations and to meet applicable plumbing codes.

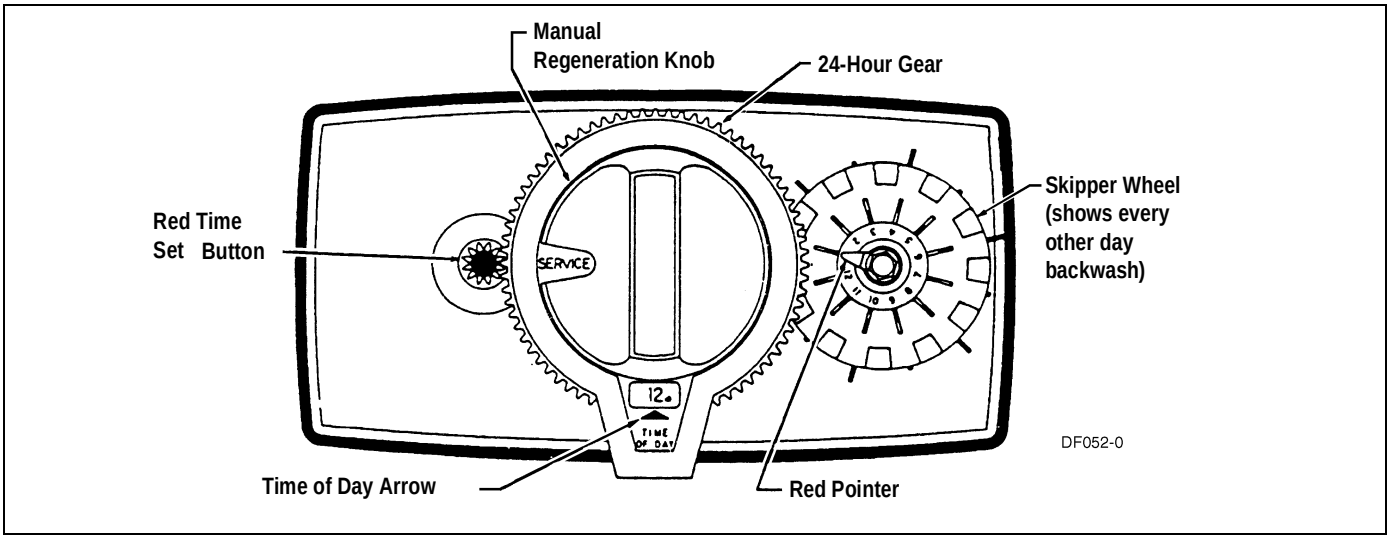

Figure 2: Model ***5600*** Backwash Filter Control

B

1. Open a treated water tap down stream of the filter.
2. Manually index the filter to the **I** position and allow the mineral tank to fill by slowly opening the main water supply valve. Any bypass should be in the **I** position.

   E: The water flowing from the downstream tap is cloudy and/or contains media fines as well as air. Allow the water to run until it appears clean and free of air.
3. When a steady clean flow appears at the tap, close the tap and the main water supply valve and allow the filter media bed to settle for 15–20 minutes.
4. Manually index the filter to the **B** position.
5. To prevent a sudden surge of water and air, partially open the main water supply valve so that the flow at the drain of the filter is approximately 1 gpm (3.7 Lpm). The water at the drain is cloudy again and/or contains media fines as well as air. Allow water to flow at the drain until it appears clean and free of air.
6. Continue to open the water supply valve until it is completely open. Allow water to flow at the drain until all media fines are washed out of the filter.
7. Manually index the filter to the **I** position, and again open the downstream tap. Check to be sure that the water flows clear. If necessary, allow water to flow until all media fines are gone. If the tap is equipped with an aerator check that is not plugged with media fines and pipe scale.
8. Plug in the electrical cord and look in the sight hole on the back of the timer motor to ensure that it is running. Set the days backwashing is to occur by sliding tabs on the skipper wheel outward to expose trip fingers. Each tab is one day. Finger at red pointer is tonight. Moving clockwise from red pointer, extend or retract fingers to obtain the desired backwash schedule.
9. Set time of day by pushing red button and spin the 24-hour gear until the present time of day is visible above the time of day arrow.

5600 B F I & 9 9 (C ’ .)

C. F D

1. **I** position. *See Figure 4, page 10*.
2. position.
   - Same as *Figure 4, page 10* with standard piston (white end plug) or filter piston (black end plug).
   - Eliminated with low water piston (gray end plug).
3. **B** position.
   - Same as *Figure 6, page 11* with standard piston.
   - 15 minutes with filter piston.
   - 7 minutes with low water piston.
4. **B** position.
   - Eliminated, resulting in a 50 minute pause, no water flows during this time.
5. position.
   - Eliminated, resulting in a 50 minute pause, no water flows during this time.
6. **B** position.
   - Same as *Figure 9, page 12* with standard piston.
   - 15 minutes with filter piston.
   - 7 minutes with low water piston.
7. position.
   - Same as *Figure 10, page 13* with standard or filter piston.
   - Eliminate with low water piston.
8. **B** position.
   - Eliminated, filter is back in service at this time.

E: Install the water softener with the inlet, outlet and drain connections made according to manufacturer's recommendations and to meet applicable plumbing codes.

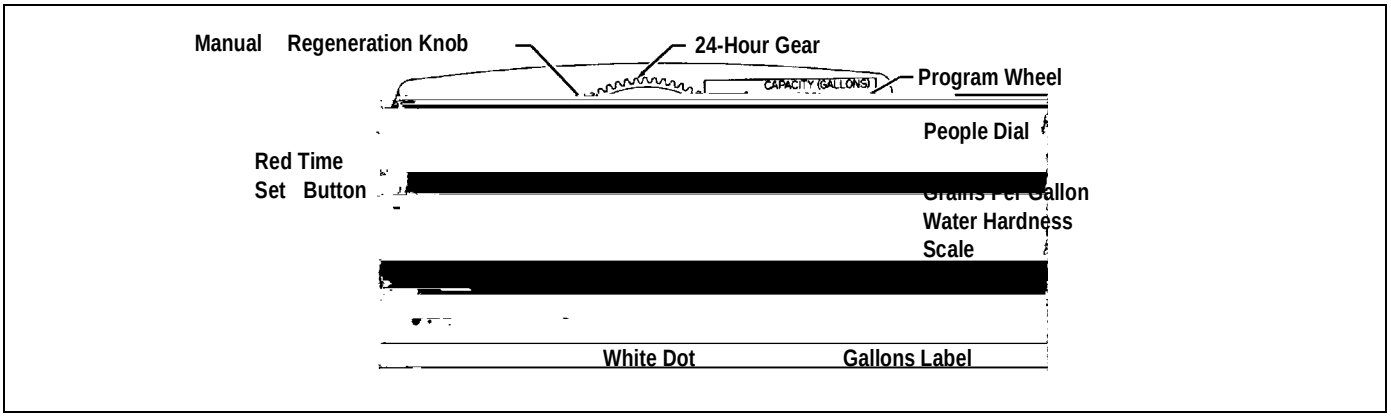

Figure 3: Model ***5600 E***

1. Manually index the softener control to the **I** position and let water flow into the resin tank. When the water flow stops, open a softened water tap until all air is released from the lines. Then close tap.

   E: The various regeneration positions may be dialed manually by turning the knob on the front of the control until the indicator shows that the softener is in the desired position.

2. Set water usage program wheel using any one of the following procedures:

   — Typical Residential Application

   To program, just set the time, set the hardness and it automatically monitors system needs and regenerates only when necessary. To set time of day press red time set button and turn 24-hour gear until present time of day is at "time of day." Set program wheel by lifting the "people" dial and rotating it so that the number of people in the household is aligned with the household grains per gallon water hardness. Release the dial and check for firm engagement at setting. This method provides reserve capacity based on 75 gallons per person.

   — Optional Programming Procedures

   Calculate the gallon capacity of the system, subtract the necessary reserve requirement and set the gallons available at the small white dot on program wheel gear. Note, drawing shows 850 gallon setting. The capacity (gallons) arrow denotes remaining gallons exclusive of fixed reserve.

3. Rotate program wheel counterclockwise until it stops at position.
4. Manually index the control to the **B** position and allow water to flow at the drain for 3 or 4 minutes.
5. Remove back cover plate.
6. Make sure than the salt dosage is set as recommended by the manufacturer. Manually index the control to the **B F** position and allow the brine tank to fill to the top of the air check.
7. Manually index the control to the **B** position and allow the control to draw water from the brine tank until it stops.
8. Plug in the electrical cord and look in the sight hole in the back of the monitor to see that it is running.
9. Manually advance the control to the beginning of the **B F** position and allow the control to return to the **I** position automatically.
10. Fill the brine tank with salt.
11. Replace back cover on the control. Be sure cable is not pinched between cover and housing.
12. Make sure that any bypass valving is left in the normal **I** position.

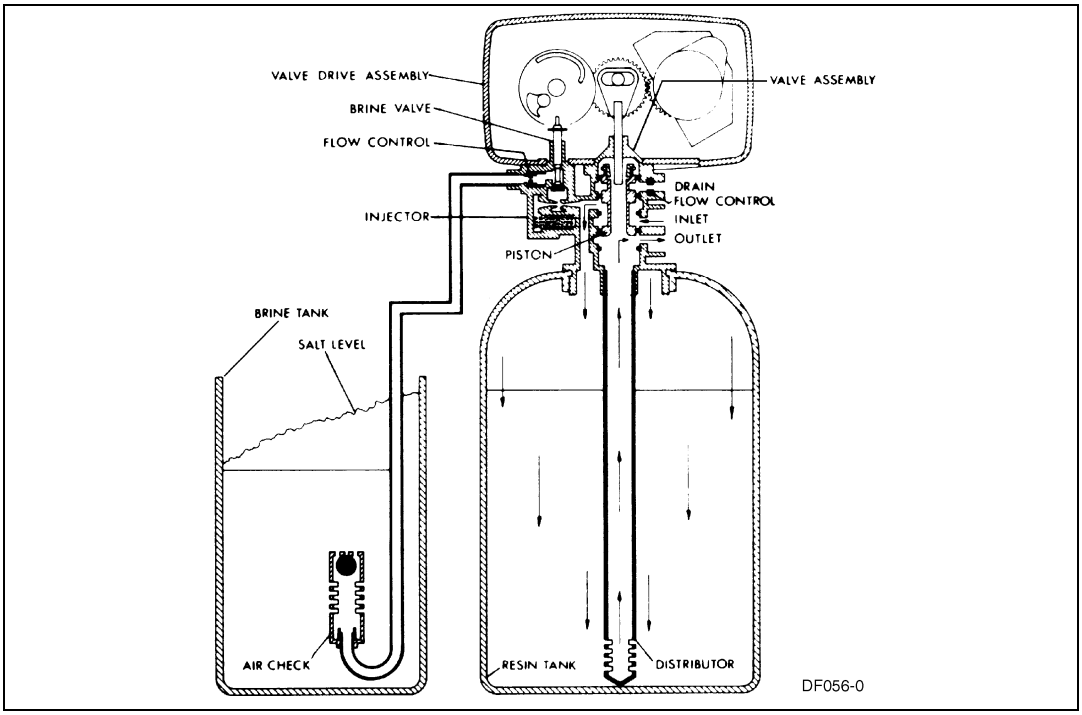

Figure 4: Service Position

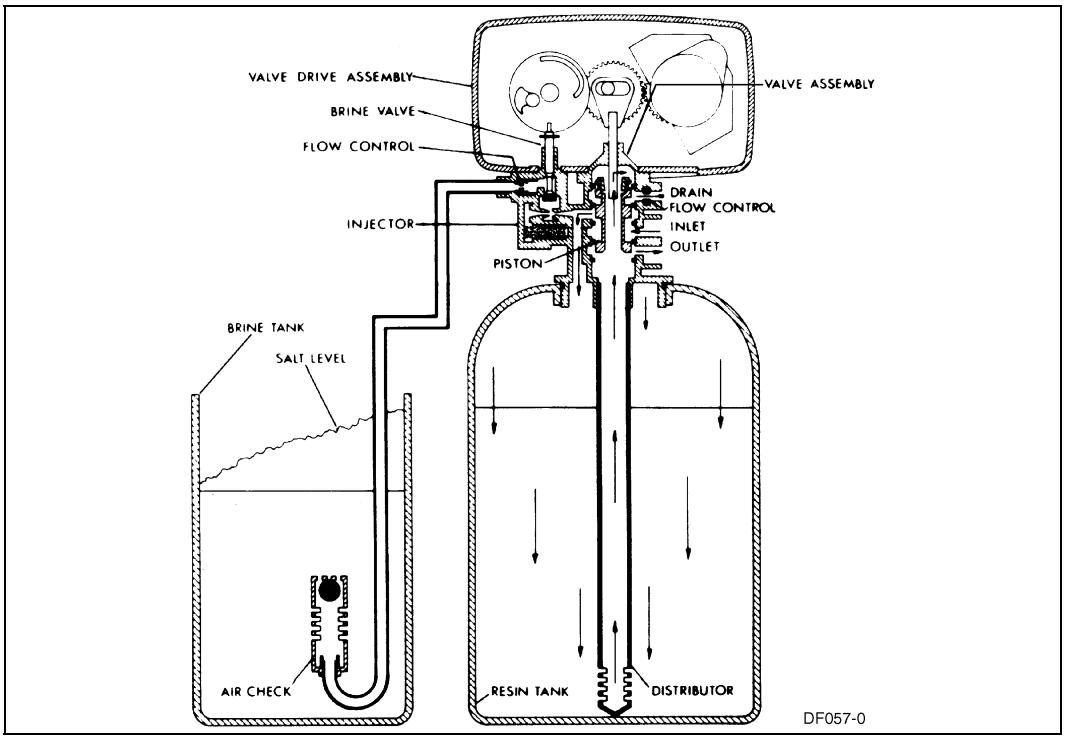

Figure 5: Preliminary Rinse Position

B

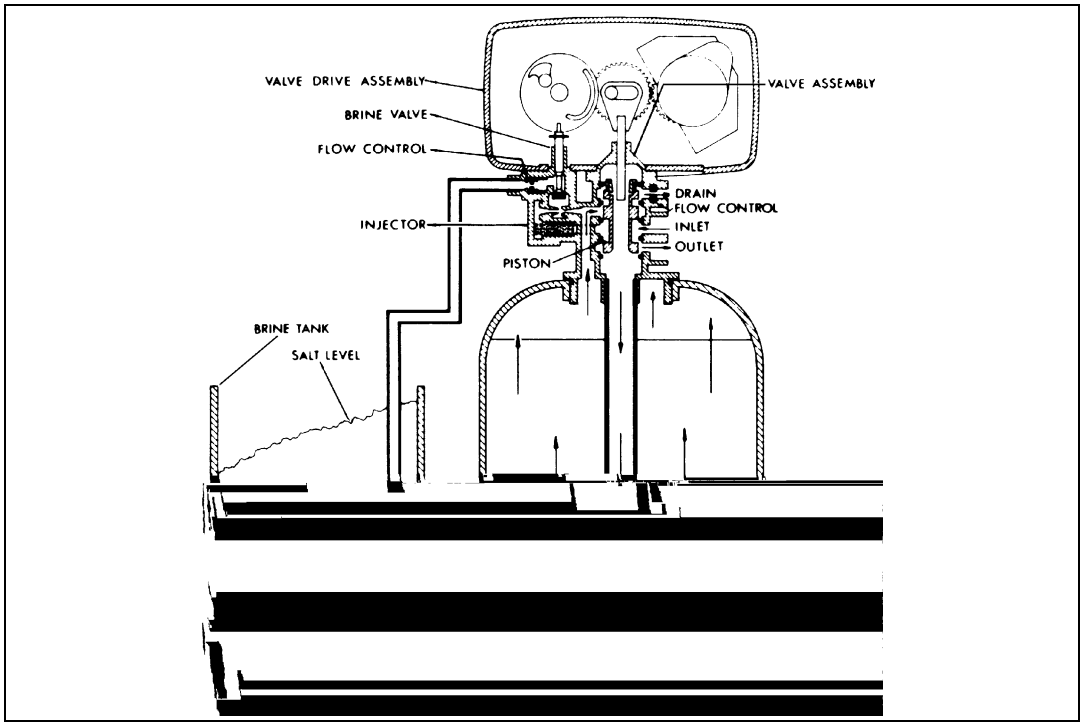

Figure 6: Backwash Position

B

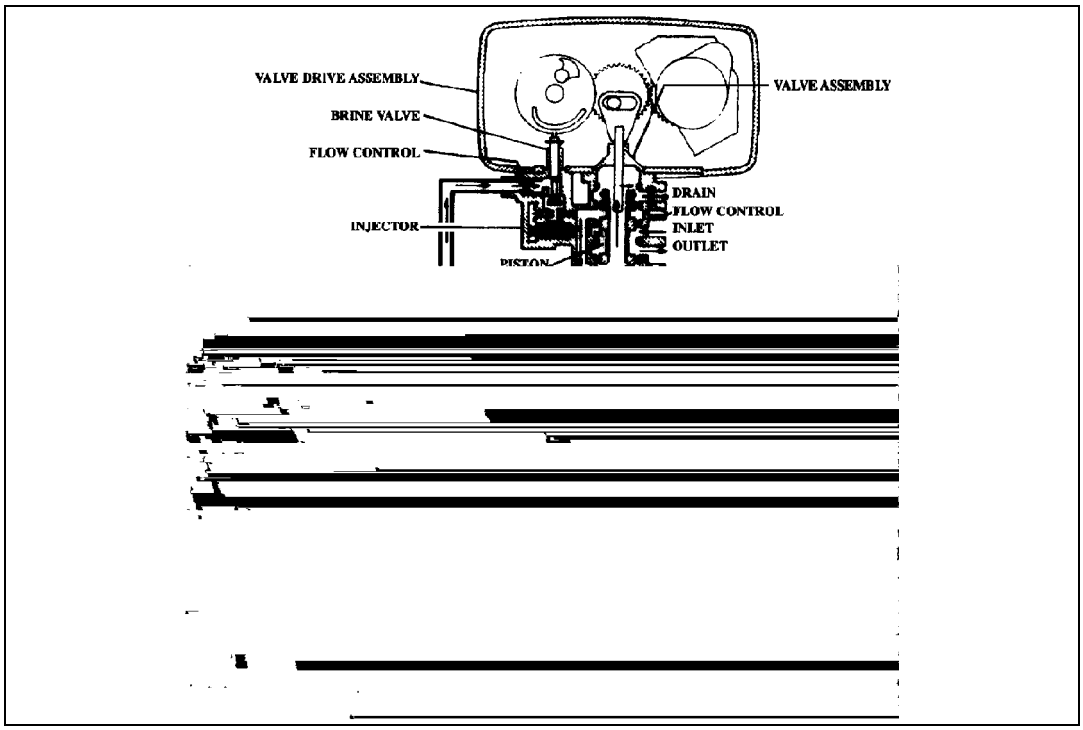

Figure 7: Brine Position

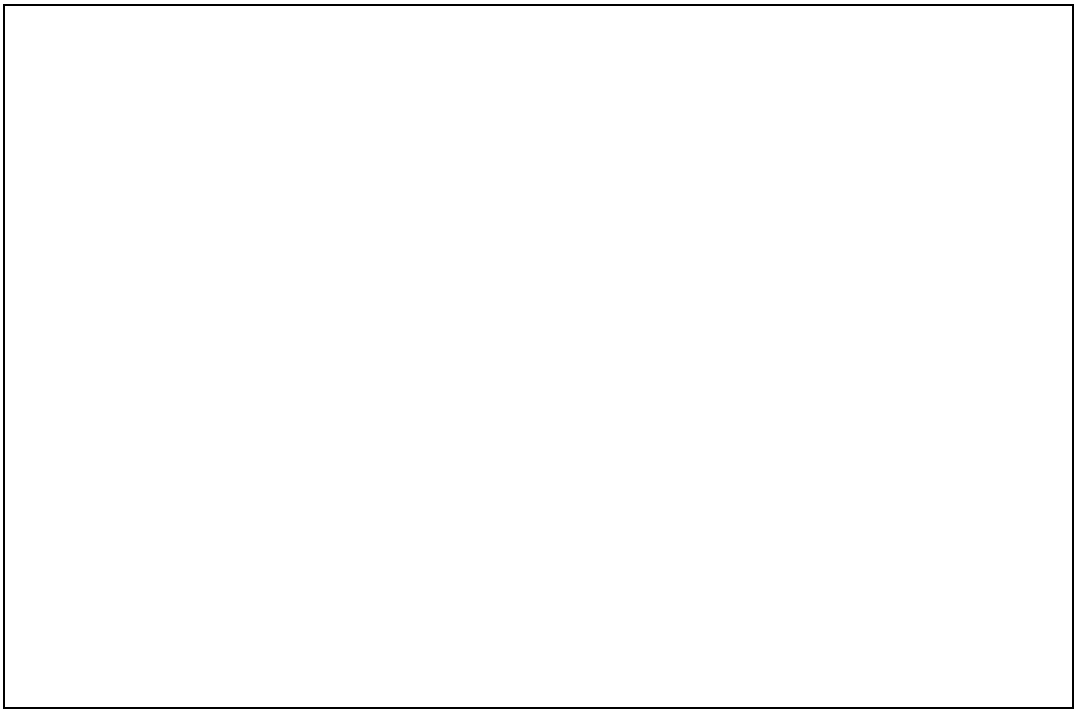

Figure 8: Slow Rinse Position

B

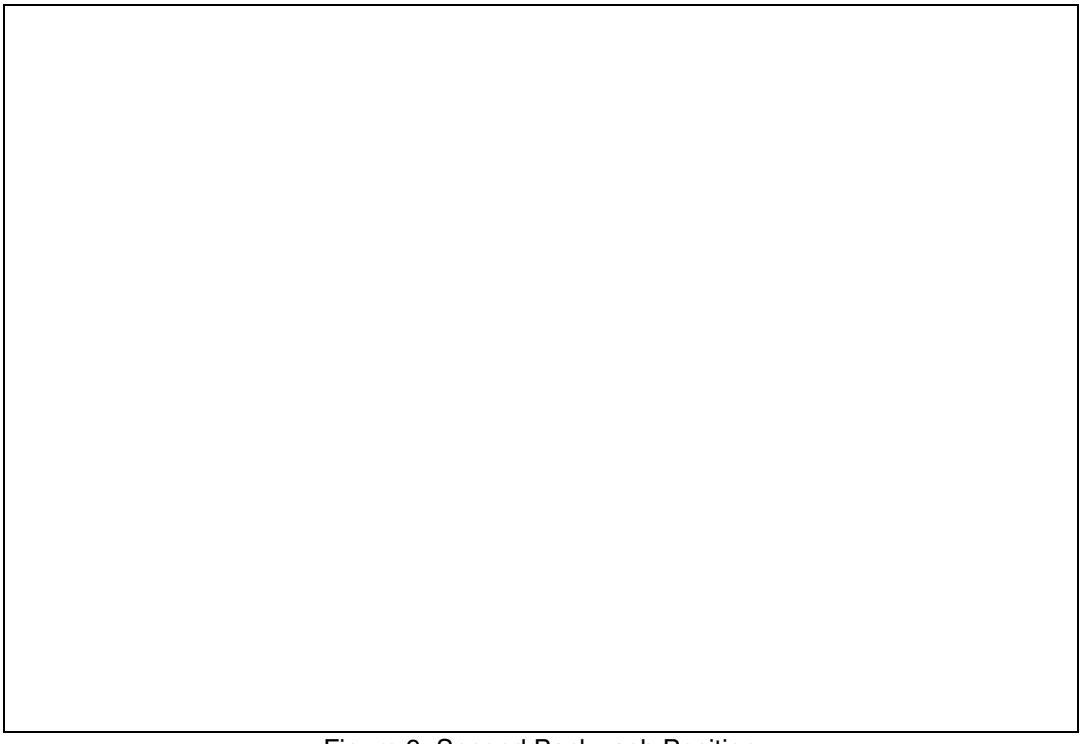

Figure 9: Second Backwash Position

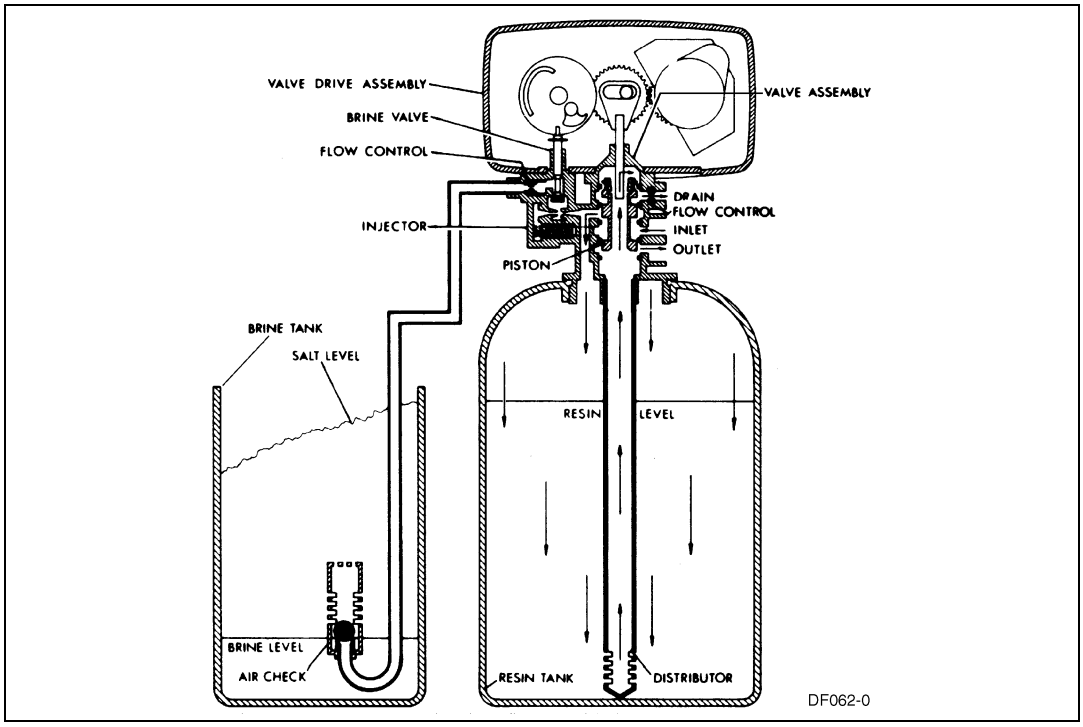

Figure 10: Settling Rinse Position

B F

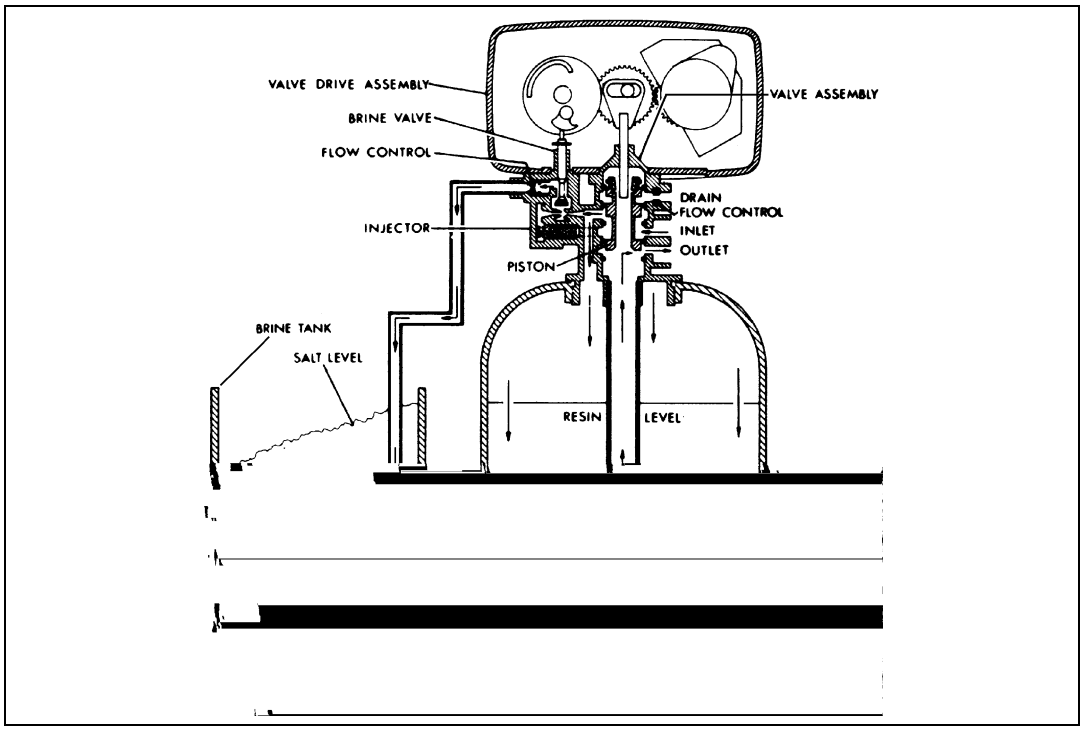

Figure 11: Brine Tank Fill Position

Figure 12: Model

5600 C D A

I	9	. '	9	D
	1	1	14448-001	Drive Housing, with Pin Drilled for Cover
	1A	1	15494-01	“L” Housing, with Pin
		1	15494-03	“L” Housing, with Pin Drilled for Designer
	2	1	13175	Motor Mounting Plate
	3	1	18743	Motor, 120V, 60 Hz
		1	19659	Motor, 24V, 60 Hz
	4	(2-3)	11384	Screw, Motor Mtg. and Ground Wire
	5	(3-5)	13296	Screw, Component Mounting
	6	1	13017	Idler Gear
	7	1	13018	Idler Pinion
	8	1	13312	Spring, Idler
	9	1	13164	Drive Gear
	11	1	13170	Main Gear and Shaft
	12	1	19205	24-hour Gear Assembly, Silver
		1	19205-01	24-hour Gear Assembly, Tan
	13	1	13011	Cycle Actuator Gear
	14	1	14177	Knob, Manual Regeneration
	15	4	13300	Ball, 1/4″ Dia.
	16	2	13311	Spring, Detent, Skipper Wheel
	19	1	14381	Skipper Wheel Assembly, 12-day
		1	14860	Skipper Wheel Assembly, 7-day
	20	1	13864	Skipper Wheel Ring
	21	2	19080	Spring, Compression, 6700
	22	1	13014	Regeneration Pointer
	23	1	11842	Electrical Cord, Standard
	24	2	12681	Wire Connector (not shown)
	25	1	13547	Strain Relief
	26	1	13229	Back Cover
	27	1	13309	Front Label, Brown on Beige
		1	13437	Front Label, Blue/Silver on Black
	28	1	13310	Rear Label, Softener
		1	18520	Rear Label, Filter
	29	1	13348	Tape Stripe, Brown on Beige
		1	13436	Tape Stripe, Blue on Silver
	30s	1	60514	Brine Cam Assembly, 3-18
		1	60514-01	Brine Cam Assembly, 6-36
		1	60514-02	Brine Cam Assembly, Minutes
	34	2	12473	Screw-drive Mounting
	35s	1	12037	Washer
	37	1	15151	Screw, Knob
	38	1	14176	Valve Position Dial, Standard
		1	14278	Valve Position Dial, Low Water
		1	15478	Valve Position Dial, Chemical Filter
		1	16715	Valve Position Dial, Filter
	39	1	14175	Knob Label, Beige
		1	14207	Knob Label, Silver
	40s	1	40214	Screw, Brine Cam

s Not used when a filter valve

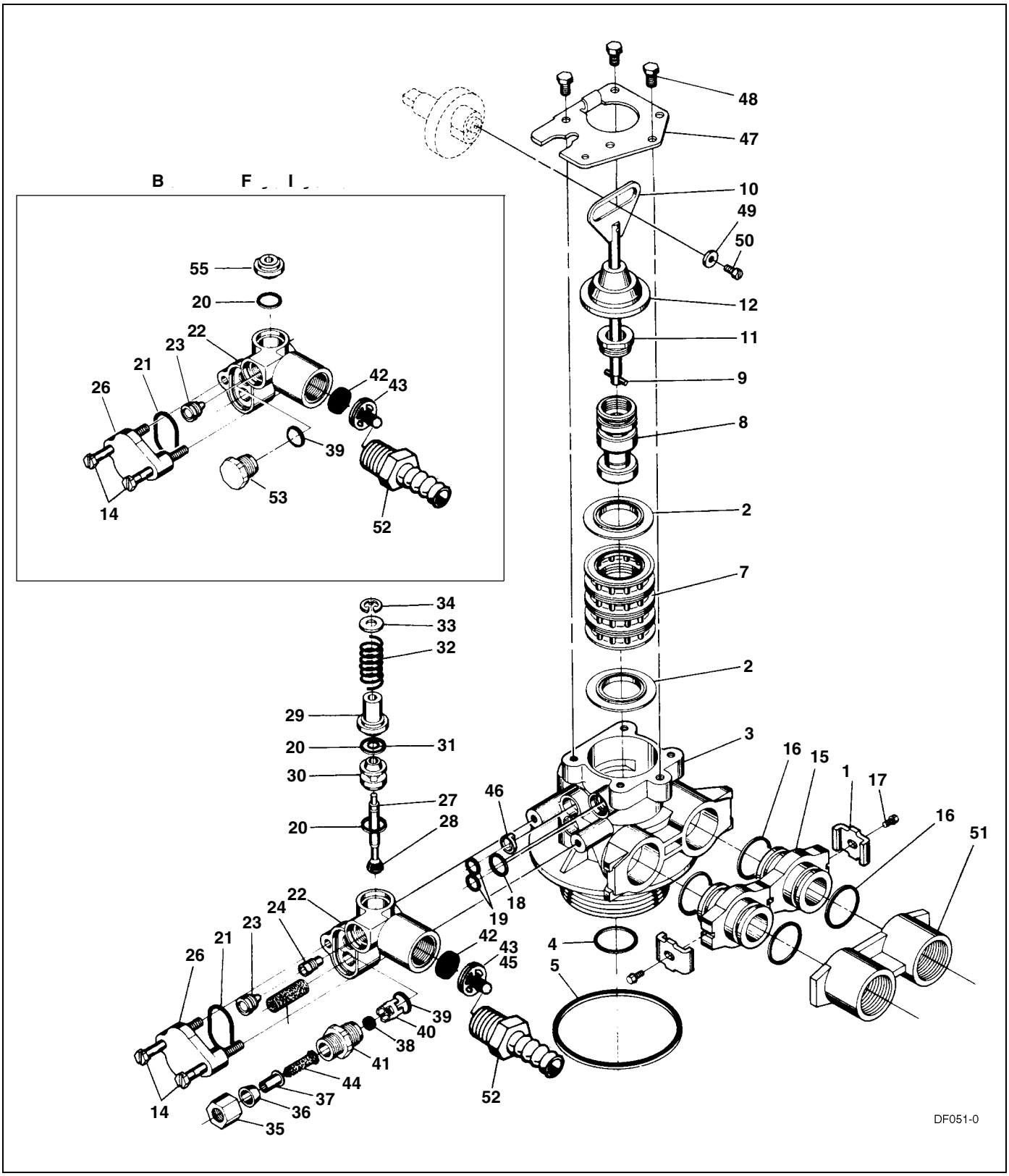

Figure 13: Model ***5600*** and ***5600 E*** Control Valve Drive Assembly

I	9	No. Req'd	Part Number	D
	1	2-4	13255	Adapter Clip (Clock or Meter)
	2	5	13242	Seal
		5	17772	Silicone Seal
	3	1	61400-12	Valve Body Assembly, 1″ Dist.
		1	61400-11	Valve Body Assembly, 3/4″ Dist.
	4	1	13304	O-ring, Distributor Tube, 1″
		1	10244	O-ring, Distributor Tube, 13/16″
	5	1	12281	O-ring, Top of Tank
	6	6		Not Assigned
	7	4	14241	Spacer
	8	1	13247	Piston, Standard
		1	13781	Piston, Low Water
		1	13852	Piston, Filter
	9	1	10696	Piston Pin
	10	1	13001	Piston Rod Assembly
	11	1	12953	Piston Retainer
	12	1	13446	End Plug Assembly Standard, White
		1	13446-10	End Plug Assembly Filter, Black
	13	1	13446-20	End Plug Assembly Low Water, Gray
	14	2	13315	Screw, Injector Mounting
	15	2	19228	Adapter Coupling
	16*	4	13305	O-ring, Adapter Coupling
	17*	2-4	13314	Screw, Adapter Coupling (Clock or Meter)
	18	1	12638	O-ring, Drain
	19	2	13301	O-ring, Injector
	20S	2	13302	O-ring, Brine Spacer
	21	1	13303	O-ring, Injector Cover
	22	1	13163	Injector Body
	23S	1	10913U	Injector Nozzle, Undrilled
	24	1	10914	Injector Throat, Specify Size
	25	1	10227	Injector Screen
	26	1	13166	Injector Cover
	27	1	13172	Brine Valve Stem
	28	1	12626	Brine Valve Seat
	29	1	13165	Brine Valve Cap
	30	1	13167	Brine Valve Spacer
	31	1	12550	Quad Ring
	32	1	11973	Spring, Brine Valve
	33	1	16098	Washer, Brine Valve
	34	1	11981-01	Retaining Ring
	35	1	10329	BLFC Fitting Nut
	36	1	10330	BLFC Ferrule
	37	1	10332	BLFC Tube Insert
	38	1	12094	BLFC Button, .25 gpm
		1	12095	BLFC Button, .50 gpm
		1	12097	BLFC Button, 1.0 gpm
	39S	1	12977	O-ring, BLFC
	40	1	13245	BLFC Button Retainer
	41	1	13244	BLFC Fitting, 3/8″
	42	1		DLFC Button, Specify Size
	43	1	13173	DLFC Button Retainer
	44	1	12767	Screen, Brine Line
	45	1	15348	O-ring, DLFC (not shown)
	46	1	13497	Air Disperser
	47	1	13546	End Plug Retainer
	48	3	12112	Screw
	49	1	13363	Washer
	50	1	13296	Screw
	51A	1	13398	Yoke, Brass, 1″ NPT
		1	13708	Yoke, Brass, 3/4″ NPT
	51B	1	18706	Yoke, Plastic, 1″ NPT
		1	18706-02	Yoke, Plastic 3/4″ NPT
	52	1	13308	Drain Hose Barb
	53	1	13918	BLFC, Plug
	54S	1	13857	Brine Valve, Plug

* not used with meter controls

S used in backwash filter

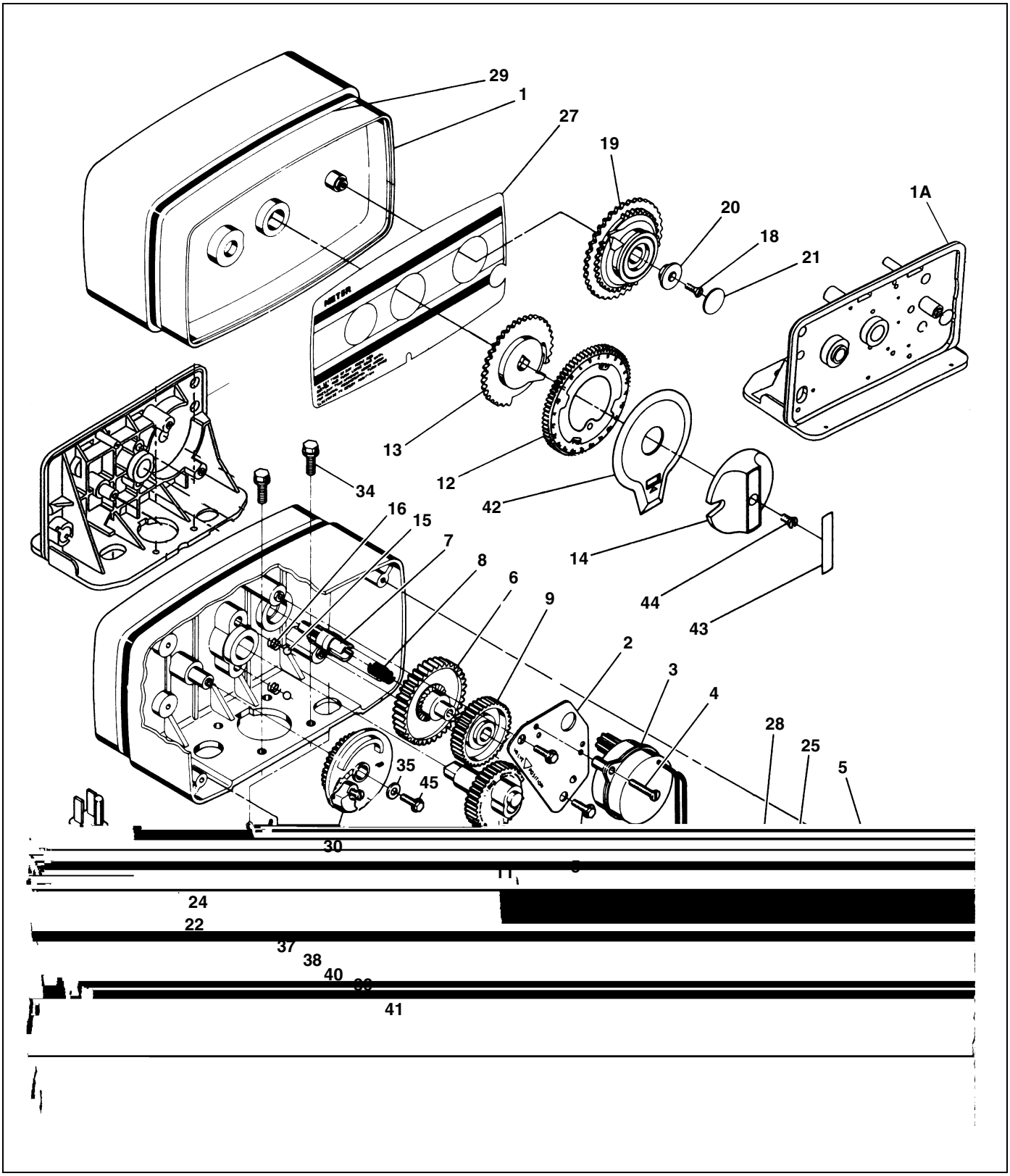

Figure 14: Model ***5600 E*** Control Valve Drive Assembly

I 9	No. Req'd	Part Number	D
1	1	14488-001	Drive Housing, with Pin Drilled for Cover
1A	1	15494-01	"L" Housing, with Pin
	1	15494-03	"L" Housing, with Pin Drilled for Designer
2	1	13175	Motor Mounting Plate
3	1	18743	Motor, 120V, 60 Hz
	1	13494	Motor, 24V, 60 Hz
4	2-3	11384	Screw, Motor Mtg. and Ground Wire
5	2-4	13296	Screw, Component Mounting
6	1	13017	Idler Gear
7	1	13018	Idler Pinion
8	1	13312	Spring, Idler
9	1	13164	Drive Gear
11	1	13170	Main Gear and Shaft
12	1	19205	24-hour Gear Assembly, Silver
	1	19205-01	24-hour Gear Assembly, Tan
13	1	13802	Cycle Actuator Gear
14	1	14177	Knob, Manual Regeneration
15	2	13300	Ball, 1/4″ Dia.
16	2	19080	Spring, Compression, 6700
18	1	13748	Screw, Program Wheel
19	1	60405-15	Program Skipper Wheel Assembly, Specify Hardness Capacity
20	1	13806	Program Wheel Retainer
21	1	13953	Cover Label, Program Wheel
22	1	11842	Electrical Cord
23	2	12681	Wire Connector
24	1	13547	Strain Relief
25	1	13229	Back Cover
26			not assigned
27	1	13955	Front Label, Beige
	1	13958	Front Label, Silver
28	1	13310	Rear Label, Softener
	1	18520	Rear Label, Filter
29	1	13957	Tape Stripe, Beige
	1	13960	Tape Stripe, Silver
30	1	60514	Brine Cam Assembly, 3-18
	1	60514-01	Brine Cam Assembly, 6-36
	1	60514-02	Brine Cam Assembly, Minutes
34	2	12473	Screw-drive Mounting
35	1	12037	Washer
37	1	13830	Drive Pinion, Program Wheel
38	1	13831	Clutch, Drive Pinion
39	1	14253	Spring Retainer
40	1	14276	Spring
41	1	14043	Cable Assembly, Standard
	1	14910	Cable Assembly, Extended, Right Angle
42	1	14176	Valve Position Dial, Standard
	1	14278	Valve Position Dial, Low Water
	1	15478	Valve Position Dial, Filter
43	1	14175	Knob Label, Beige
	1	14207	Knob Label, Silver
44	1	15151	Screw, Knob
45	1	40214	Screw, Brine Cam

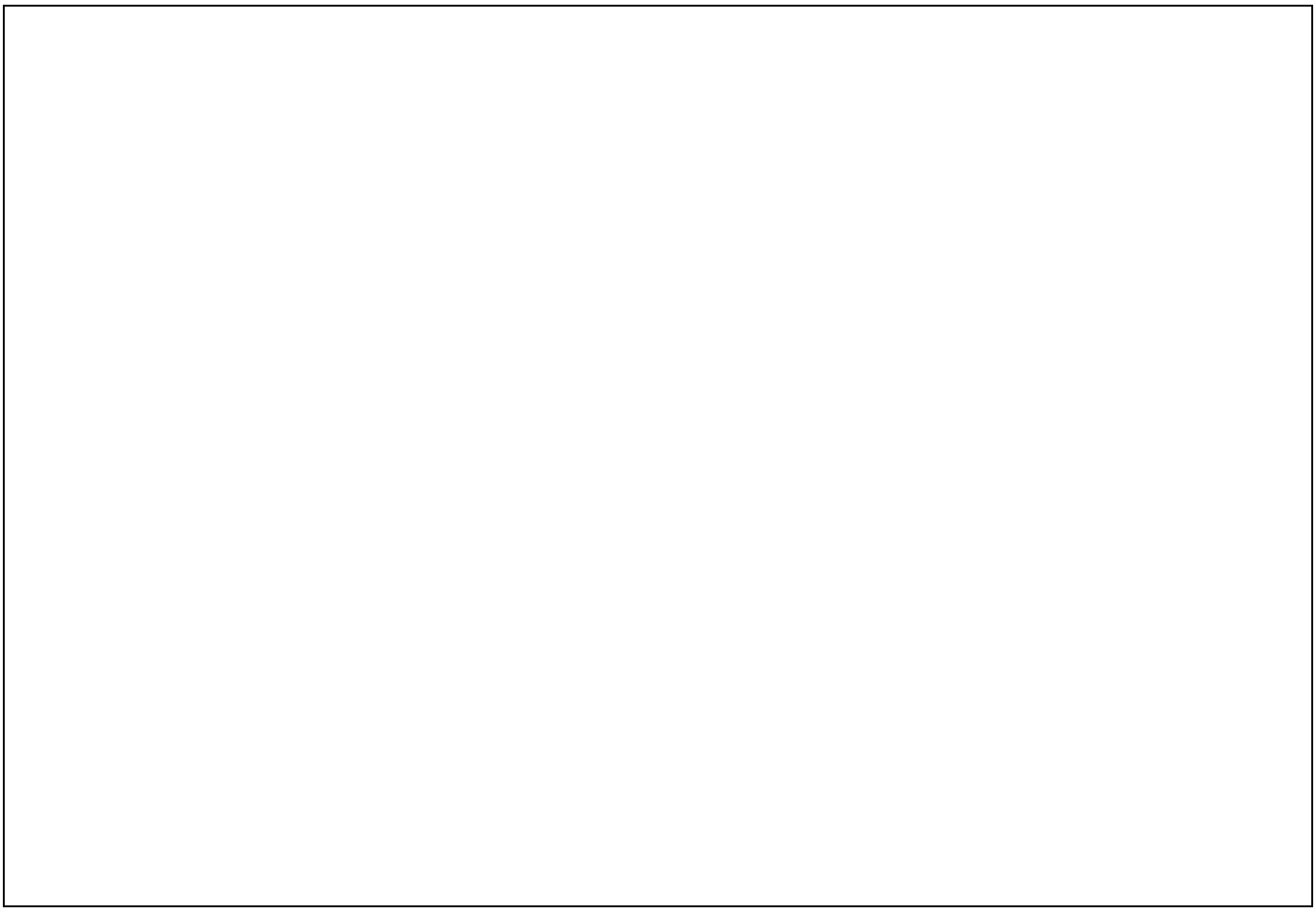

Figure 15: Bypass Valve Assembly, Plastic

I. w9	No. Req'd	Part Number	D.
9	2	13305	O-ring, 119
10	2	13255	Clip, Mounting
11	2	13314	Screw, Hex Washer Head, #8-18 x 5/8"
12A	1	18706	Yoke, Plastic 1" NPT
	1	18706-02	Yoke, Plastic 3/4"
12B	1	13708	Yoke, 3/4"
	1	13708NP	Yoke, 3/4" (Nickel-plated)
	1	13398	Yoke, 1"
	1	13398NP	Yoke, 1" (Nickel-plated)

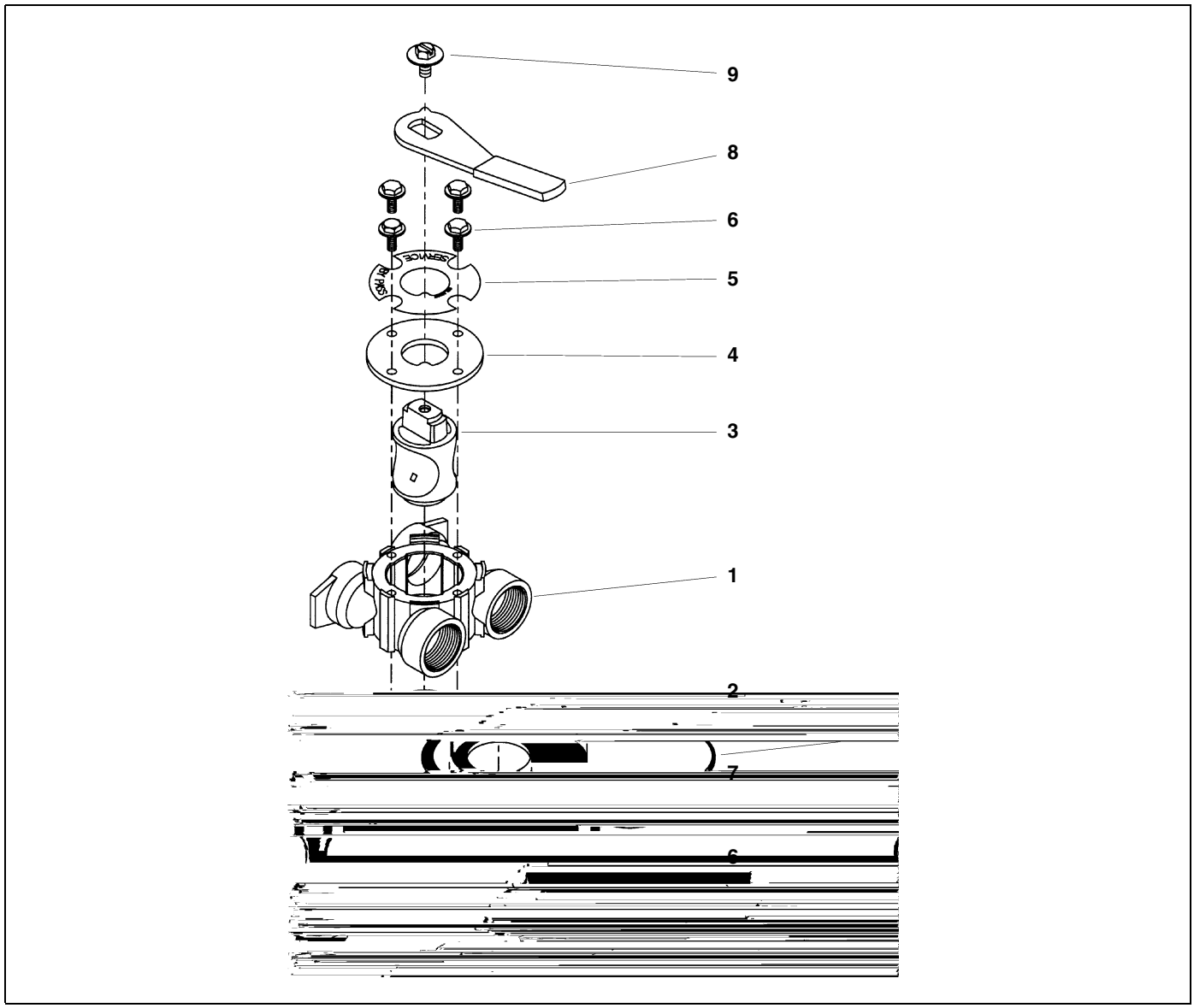

Figure 16: Bypass Valve Assembly, Brass

I 9	No. Req'd	Part Number	D
1	1	17290	Bypass Valve Body, 3/4"
	1	17290NP	Bypass Valve Body, 3/4"
	1	13399	Bypass Valve Body, 1"
	1	13399NP	Bypass Valve Body, 1" (Nickel-plated)
2	1	11726	Seal, Bypass
3	1	11972	Plug, Bypass
4	1	11978	Side Cover
5	1	13604-01	Label
6	8	15727	Screw
7	1	11986	Side Cover
8	1	11979	Lever, Bypass
9	1	11989	Screw, Hex Head, 1/4-14

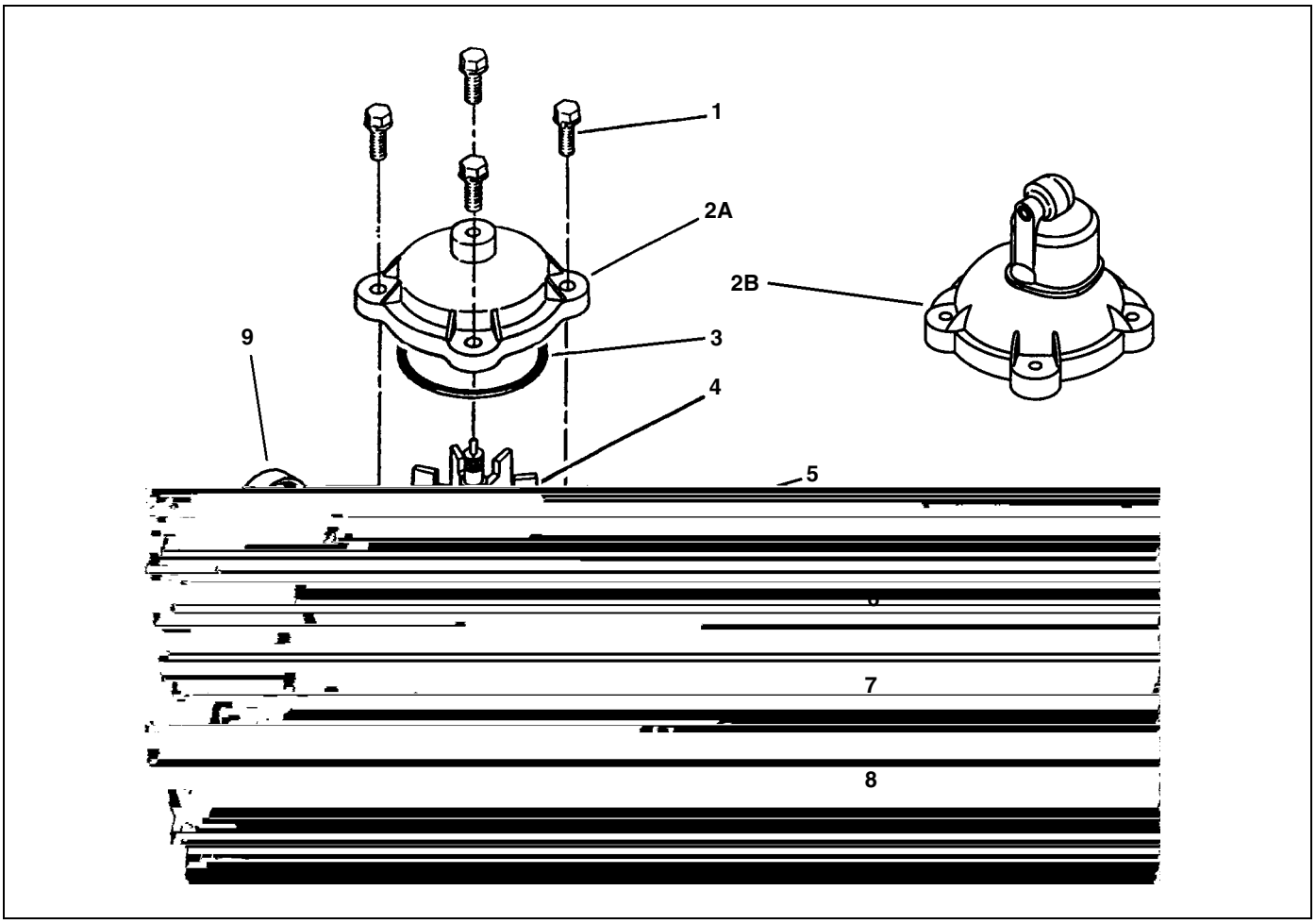

Figure 17: Model ***5600 E*** Meter Assembly

Item No.	No. Req'd	Part Number	Description
1	4	12473	Screw, Meter Cover Assembly
2A	1	14038	Meter Cover Assembly, Standard
2B	1	15659	Meter Cover Assembly, Extended Range (Right Angle)
3	1	13847	O-ring, Meter Cover Assembly
4	1	13509	Impeller
5	4	13314	Screw, Adapter Clip
6	4	13255	Adapter Clip
7	1	13821	Meter Body
8	4	13305	O-ring, Meter Body
9	1	14613	Flow Straightener

B , I

1. Unplug electrical cord from outlet.
2. Turn off water supply to conditioner:
   - If the conditioner installation has a “three valve” bypass system, first open the valve in the bypass line, then close the valves at the conditioner inlet and outlet.
   - If the conditioner has an integral bypass valve, put it in the **B.** position.
   - If there is only a shut-off valve near the conditioner inlet, close it.
3. Relieve water pressure in the conditioner by putting the control in the **B** position momentarily. Return the control to the **I** position.
4. Disconnect brine tube and drain line connections at the injector body.
5. Remove the two injector body mounting screws. The injector and brine module can now be removed from the control valve. Remove and discard valve body O-rings.
6. Replace brine valve.
   - Pull brine valve from injector body, also remove and discard O-ring at bottom of brine valve hole.
   - Apply silicone lubricant to new O-ring and reinstall at bottom of brine valve hole.
   - Apply silicone lubricant to O-ring on new valve assembly and press into brine valve hole, shoulder on bushing should be flush with injector body.
7. Replace injectors and screen.
   - Remove injector cap and screen, discard O-ring. Unscrew injector nozzle and throat from injector body.
   - Screw in new injector throat and nozzle, be sure they are seated tightly. Install a new screen.
   - Apply silicone lubricant to new O-ring and install around oval extension on injector cap.
8. Apply silicone lubricant to three new O-rings and install over three bosses on injector body.
9. Insert screws with washers through injector cap and injector. Place this assembly through hole in timer housing and into mating holes in the valve body. Tighten screws. (Be sure to reinstall brass spacers with injector on model ***4600*** valve.)
10. Reconnect brine tube and drain line.
11. Return bypass or inlet valving to normal **I** position. Water pressure automatically builds in the conditioner.

    E: Be sure to shut off any bypass line.
12. Check for leaks at all seal areas. Check drain seal with the control in the **B** position.
13. Plug electrical cord into outlet.
14. Set time of day and cycle the control valve manually to assure proper function.
    - Make sure control valve is in the **I** position.
15. Make sure there is enough brine in the brine tank.
16. Rotate program wheel counterclockwise until it stops at position.
17. Start regeneration cycle manually if water is hard.

1. Unplug electrical cord from outlet.
2. Turn off water supply to conditioner:
   — If the conditioner installation has a “three valve” bypass system, first open the valve in the bypass line, then close the valves at the conditioner inlet and outlet.
   — If the conditioner has an integral bypass valve, put it in the **B**. position.
   — If there is only a shut-off valve near the conditioner inlet, close it.
3. Relieve water pressure in the conditioner by putting the control in the **B** position momentarily. Return the control to the **I** position.
4. Pull cable out of meter cover. Remove the control valve back cover.
5. Remove screw and washer at drive yoke. Remove timer mounting screws. The entire timer assembly now lifts off easily.
6. Put new timer on top of valve. Be sure drive pin on main gear engages slot in drive yoke (rotate control knob if necessary).
7. Replace timer mounting screws. Replace screw and washer at drive yoke.
8. Return bypass or inlet valving to normal **I** position. Water pressure automatically builds in the conditioner.

   E: Be sure to shut off any bypass line.
9. Plug electrical cord into outlet.
10. Set time of day, program wheel, and salt usage. Cycle the control valve manually to assure proper function. Be sure to return the control valve to the **I** position.
11. Replace the control valve back cover. Be sure grommet at cable hole is in place.
12. Make sure there is enough brine in the brine tank.
13. Rotate program wheel counterclockwise until it stops at position.
14. Start regeneration cycle manually if water is hard.
15. Plug cable into meter cover, rotate cable to align drive flat if necessary.

A

1. Unplug electrical cord from outlet.
2. Turn off water supply to conditioner:
   - If the conditioner installation has a “three valve” bypass system, first open the valve in the bypass line, then close the valves at the conditioner inlet and outlet.
   - If the conditioner has an integral bypass valve, put it in the **B**. position.
   - If there is only a shut-off valve near the conditioner inlet, close it.
3. Relieve water pressure in the conditioner by putting the control in the **B** position momentarily. Return the control to the **I** .

1. Unplug electrical cord from outlet.
2. Turn off water supply to conditioner:
   - — If the conditioner installation has a “three valve” bypass system, first open the valve in the bypass line, then close the valves at the conditioner inlet and outlet.
   - — If the conditioner has an integral bypass valve, put it in the **B**. position.
   - — If there as only a shut-off valve near the conditioner inlet, close it.
3. Relieve water pressure in the conditioner by putting the control in the **B** position momentarily. Return the control to the **I** position.
4. Pull cable out of meter cover. Remove the control valve back cover.
5. Remove screw and washer at drive yoke. Remove timer mounting screws. The entire timer assembly now lifts off easily. Remove end plug retainer plate.
6. Pull upward on end of piston rod yoke until assembly is out of valve. Remove and replace seats and spacers with fingers.

1. Unplug electrical cord from outlet.
2. Turn off water supply to conditioner:
   — If the conditioner installation has a “three valve” bypass system, first open the valve in the bypass line, then close the valves at the conditioner inlet and outlet.
   — If the conditioner has an integral bypass valve, put it in the **B.** position.
   — If there is only a shut-off valve near the conditioner inlet, close it.
3. Relieve water pressure in the conditioner by putting the control in the **B** position momentarily. Return the control to the **I** position.
4. Pull cable out of meter cover.
5. Remove two screws and clips at bypass valve or yoke. Pull resin tank away from plumbing connections.
6. Remove two screws and clips at control valve. Pull meter module out of control valve.
7. Apply silicone lubricant to four new O-rings and assemble to four ports on new meter module.
8. Assemble meter to control valve. Note, meter portion of module must be assembled at valve outlet.
9. Attach two clips and screws at control valve. Be sure clip legs are firmly engaged with lugs.
10. Push resin tank back to the plumbing connections and engage meter ports with bypass valve or yoke.
11. Attach two clips and screws at bypass valve or yoke. Be sure clip legs are firmly engaged with lugs.
12. Return bypass or inlet valving to normal **I** position. Water pressure automatically builds in the conditioner.

    E: Be sure to shut off any bypass line.
13. Check for leaks at all seal areas.
14. Plug electrical cord into outlet.
15. Set time of day.
    — Make sure control valve is in the **I** position.
16. Rotate program wheel counterclockwise until it stops at position.
17. Start regeneration cycle manually if water is hard.
18. Plug cable into meter cover. Rotate cable to align drive flat if necessary.

C / I

1. Unplug electrical cord from outlet.
2. Turn off water supply to conditioner:
   - If the conditioner installation has a “three valve” bypass system, first open the valve in the bypass line, then close the valves at the conditioner inlet and outlet.
   - If the conditioner has an integral bypass valve, put it in the **B.** position.
   - If there is only a shut-off valve near the conditioner inlet, close it.
3. Relieve water pressure in the conditioner by putting the control in the **B** position momentarily. Return the control to the **I** position.
4. Pull cable out of meter cover.
5. Remove four screws on cover
6. Lift cover off of meter module, discard O-ring.
7. Remove and inspect impeller for gear or spindle damage, replace if necessary.
8. Apply silicone lubricant to new O-ring and assemble to the smallest diameter on meter cover.
9. Assemble cover to meter module. Be sure impeller spindle enters freely into cover. Press firmly on cover and rotate if necessary to assist in assembly.
10. Replace four screws and tighten.
11. Return bypass or inlet valving to normal **I** position. Water pressure automatically builds in the conditioner.

    E: Be sure to shut off any bypass line.
12. Check for leaks at all seal areas.
13. Plug electrical cord into outlet.
14. Set time of day.
    - Make sure control valve is in the **I** position.
15. Rotate program wheel counterclockwise until it stops at position.
16. Start regeneration cycle manually if water is hard.
17. Plug cable into meter cover. Rotate cable to align drive flat if necessary.

BLE	CA E	C EC I
1. Softener fails to regenerate.	A. Electrical service to unit has been interrupted.	A. Assure permanent electrical service (check fuse, plug, pull chain or switch).
	B. Timer is defective.	B. Replace timer.
	C. Power failure.	C. Reset time of day.
2. Softener delivers hard water.	A. Bypass valve is open.	A. Close bypass valve.
	B. No salt in brine tank.	B. Add salt to brine tank and maintain salt level above water level.
	C. Injectors or screen is plugged.	C. Replace injectors and screen.
	D. Insufficient water flowing into brine tank.	D. Check brine tank fill time and clean brine line flow control if plugged.
	E. Hot water tank hardness.	E. Repeated flushings of the hot water tank is required.
	F. Leak at distributor tube.	F. Make sure distributor tube is not cracked. Check O-ring and tube pilot.
	G. Internal valve leak.	G. Replace seals and spacers and/or piston.
3. Unit uses too much salt.	A. Improper salt setting.	A. Check salt usage and salt setting.
	B. Excess water in brine tank.	B. See problem number 7.
4. Loss of water pressure.	A. Iron build-up in line to water conditioner.	A. Clean line to water conditioner.
	B. Iron build-up in water conditioner.	B. Clean control and add resin cleaner to resin bed. Increase frequency of regeneration.
	C. Inlet of control plugged due to foreign material loose from pipes by recent work done on plumbing system.	C. Remove piston and clean control.
5. Loss of resin through drain line.	A. Air in water system.	A. Assure that well system has proper air elimination control, check for dry well condition.
6. Iron in conditioned water.	A. Fouled resin bed.	A. Check backwash, brine draw and brine tank fill, increase frequency of regeneration, increase backwash time.
7. Excessive water in brine tank.	A. Plugged drain line flow control.	A. Clean flow control.
8. Salt water in service line.	A. Plugged injector system.	A. Clean injector and replace screen.
	B. Timer not cycling.	B. Replace timer.
	C. Foreign material in brine valve.	C. Clean or replace brine valve.
	D. Foreign material in brine line flow control.	D. Clean brine line flow control.

BLE CA E C EC I

G H C

BLE	CA E	C EC I
1. Filter fails to backwash.	A. Electrical service to unit has been interrupted.	A. Assure permanent electrical service (check fuse, plug, pull chain or switch).
	B. Timer is defective.	B. Replace timer.
	C. Power failure.	C. Reset time of day.
2. Filter "bleeds" iron.	A. Bypass valve is open.	A. Close bypass valve.
	B. Excessive water usage.	B. Reduce days between, backwashing (see timer instructions), make sure that there is not a leaking valve in the toilet bowl or sinks.
	C. Hot water tank rusty.	C. Repeated flushings of the hot water tank is required.
	D. Leak at distributor tube.	D. Make sure distributor tube is not cracked, check O-ring and tube pilot.
	E. Defective or stripped filter medium bed.	E. Replace bed.
	F. Inadequate backwash flow rate.	F. Make sure filter has correct drain flow control, be sure flow control is not clogged or drain line restricted, be sure water pressure has not dropped, increase backwash flow rate according to specifications for your unit, see your dealer for recommendations.
3. Loss of water pressure.	A. Iron or turbidity build-up in water filter.	A. Reduce days between backwashing so filter backwashes more often, make sure filter is sized large enough to handle water usage.
	B. Inlet plugged due to foreign material broken loose from pipes by recent work done on plumbing system.	B. Remove piston and clean control.
4. Loss of filter medium through drain line.	A. Broken or missing top screen.	A. Replace top screen, must have 0.020" wide slots.
5. Drain flows continuously.	A. Foreign material in control.	A. Remove piston assembly and inspect bore, remove foreign material and check control in various cycle positions.
	B. Internal control leak.	B. Replace seals and/or piston assembly.
	C. Control valve jammed in rinse or backwash.	C. Replace piston, seals and spacers (and drive motor if necessary).

Part Number	D
60102-00	Piston, Softener
60102-10	Piston, Filter
60102-20	Piston, Low Water
60125	Seal Kit
60084-XX	Injector
60032	Brine Valve
60514	Brine Cam, 3-18
60514-01	Brine Cam, 6-36
60514-02	Brine Cam, Minutes
60510	Coupling, with Clip and Screws
60040	Bypass, Brass 3/4" NPT
60041	Bypass, Brass 1" NPT
60049	Bypass, Plastic
60086	Meter, Standard
60087	Meter, Extended
160136-5600	Service Kit, Meter
160135-5600	Service Kit, Clock
14860	Skipper Wheel, 7-day
14381	Skipper Wheel, 12-day
60405-10	Meter Program Wheel, Standard
60405-20	Meter Program Wheel, Extended